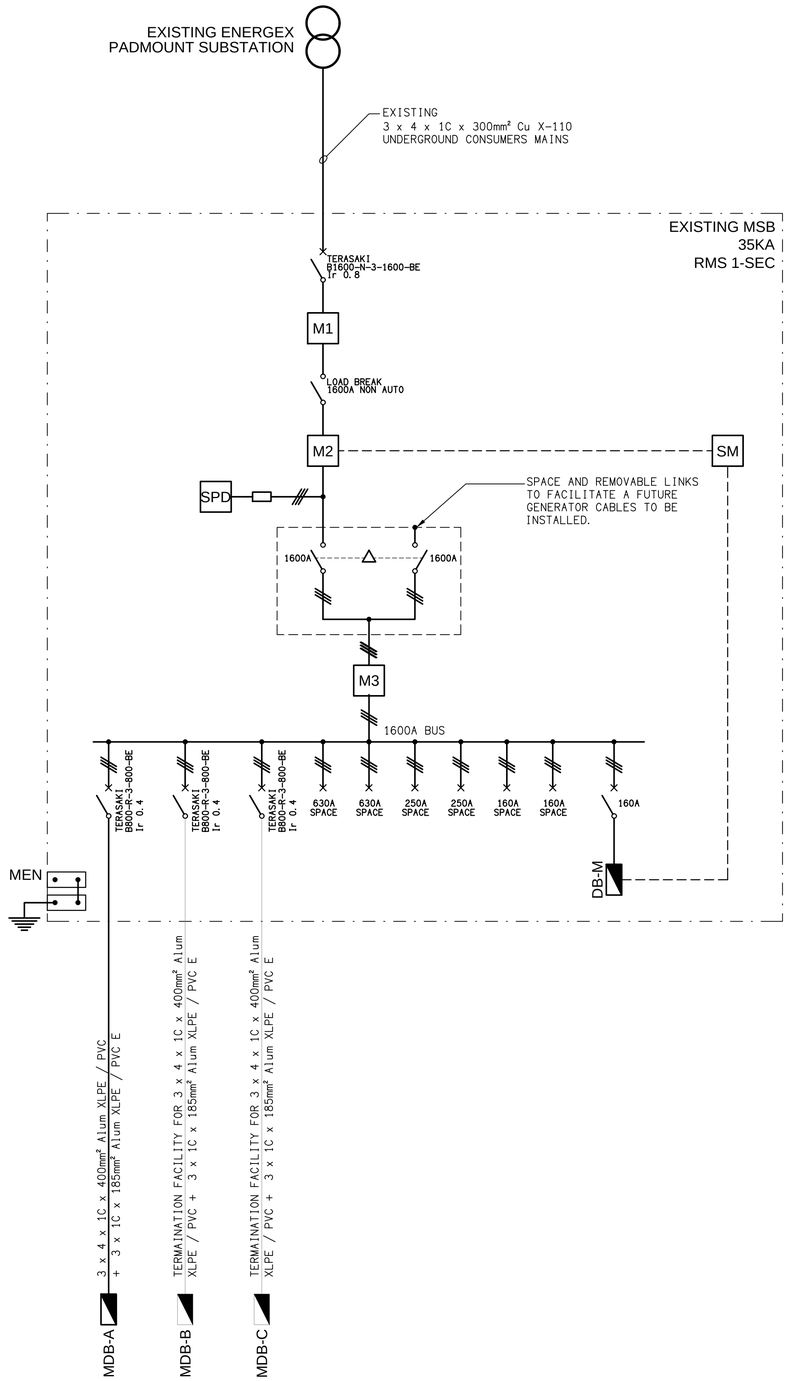

SCHEMATIC

MAIN SWITCHBOARD CONFIGURATION

NOT TO SCALE

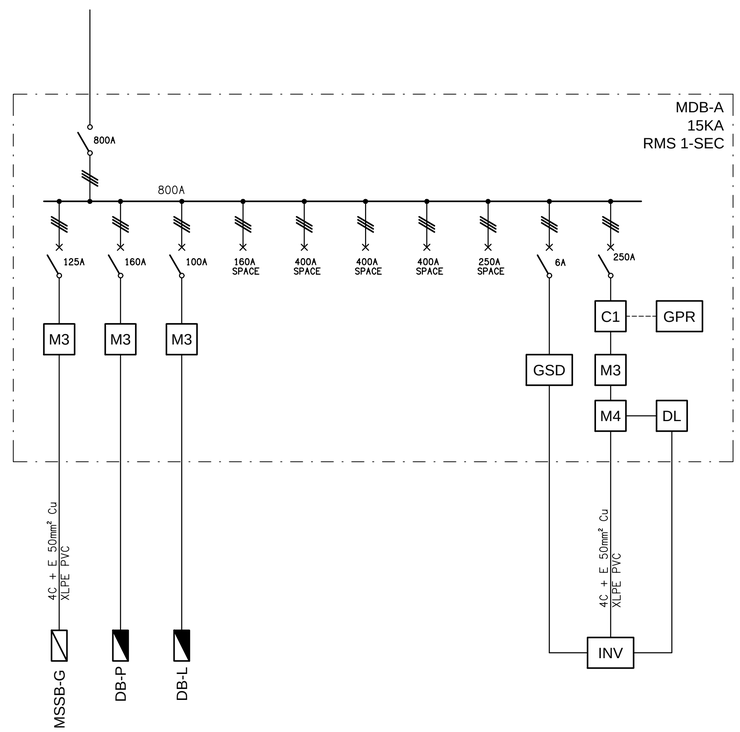

SCHEMATIC

MDB-A CONFIGURATION

NOT TO SCALE

REV:	DESCRIPTION:	DATE:
A	PRELIMINARY	04/09/2026

ELECTRICAL DESIGN GROUP BRISBANE
PTY LTD
ACN 092 710 793

TRADING AS:
ELECTRICAL DESIGN GROUP

THE COPYRIGHT OF THIS DRAWING
REMAINS THE PROPERTY OF THE
ELECTRICAL DESIGN GROUP.

USE FIGURED DIMENSIONS
IN PREFERENCE TO SCALE.

ALL DIMENSIONS TO BE
VERIFIED ONSITE.

ELECTRICAL DESIGN GROUP
ELECTRICAL BUILDING SERVICES CONSULTANTS
BRISBANE GOLD COAST
P.O.Box 15, Sherwood Q.4075
Phone: (07) 3278 4375
Email: brisbane@edg.net.au
Web: www.edg.net.au

PROJECT:
KINGS CHRISTIAN COLLEGE WALLOON
PRIMARY WAL01

KARRABIN ROSEWOOD ROAD, WALLOON

DRAWING:
ELECTRICAL SERVICES
POWER SCHEMATICS

SCALE: NOT TO SCALE AT A1

PROJECT NO:	DRAWING NO:	REVISION:
C3826a	E03	A